Specifications on this page are subject to change without notice. Every attempt has been made to ensure the accuracy of this drawing; however, Traxxas cannot be held responsible for typographical or other errors.

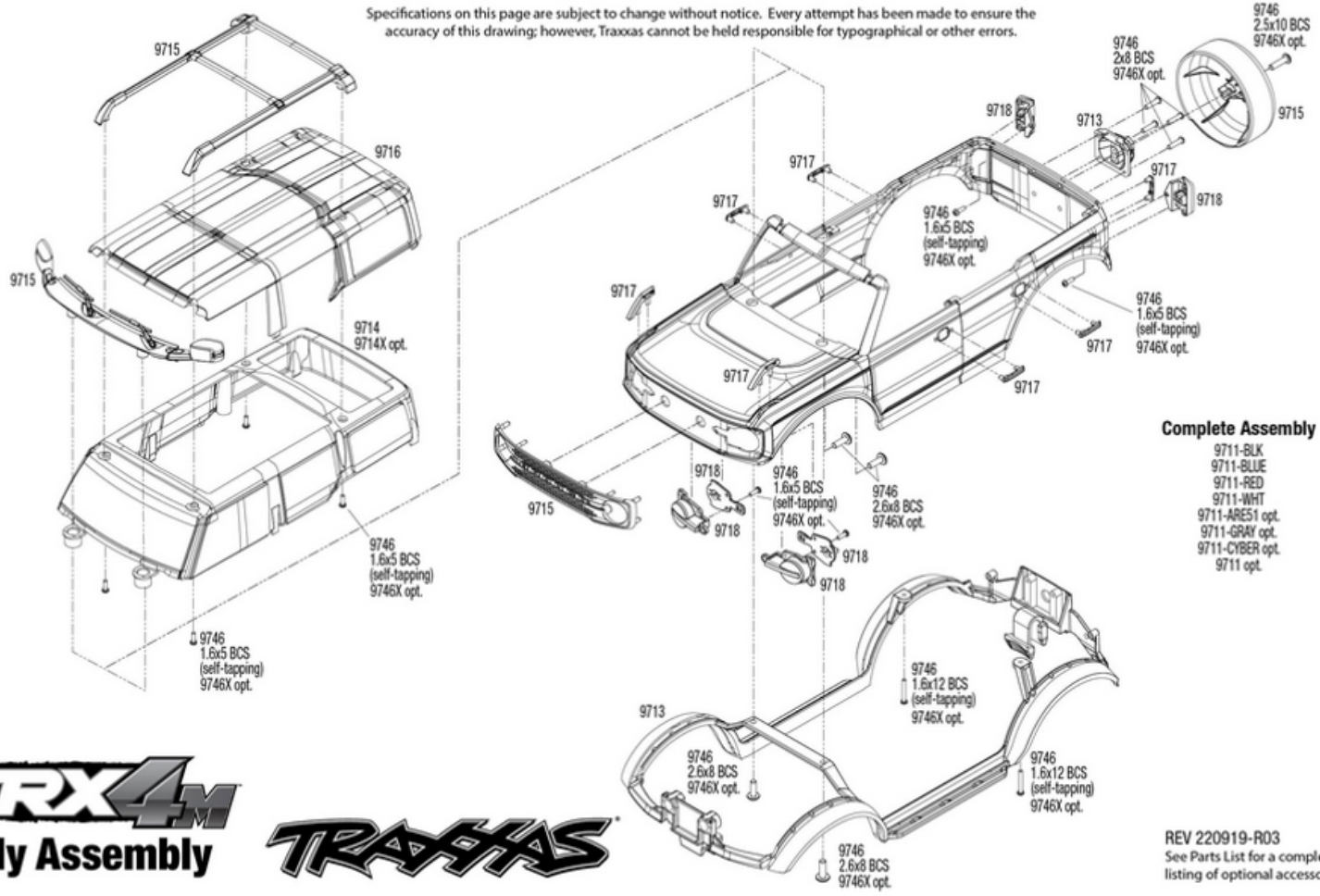

Complete Assembly

9711-BLK
9711-BLUE
9711-RED
9711-WHT
9711-ARE51 opt.
9711-GRAY opt.
9711-CYBER opt.
9711 opt.

TRX4M Body Assembly

TRAXXAS

REV 220919-R03

See Parts List for a complete listing of optional accessories.

TRX-4M Chassis Assembly

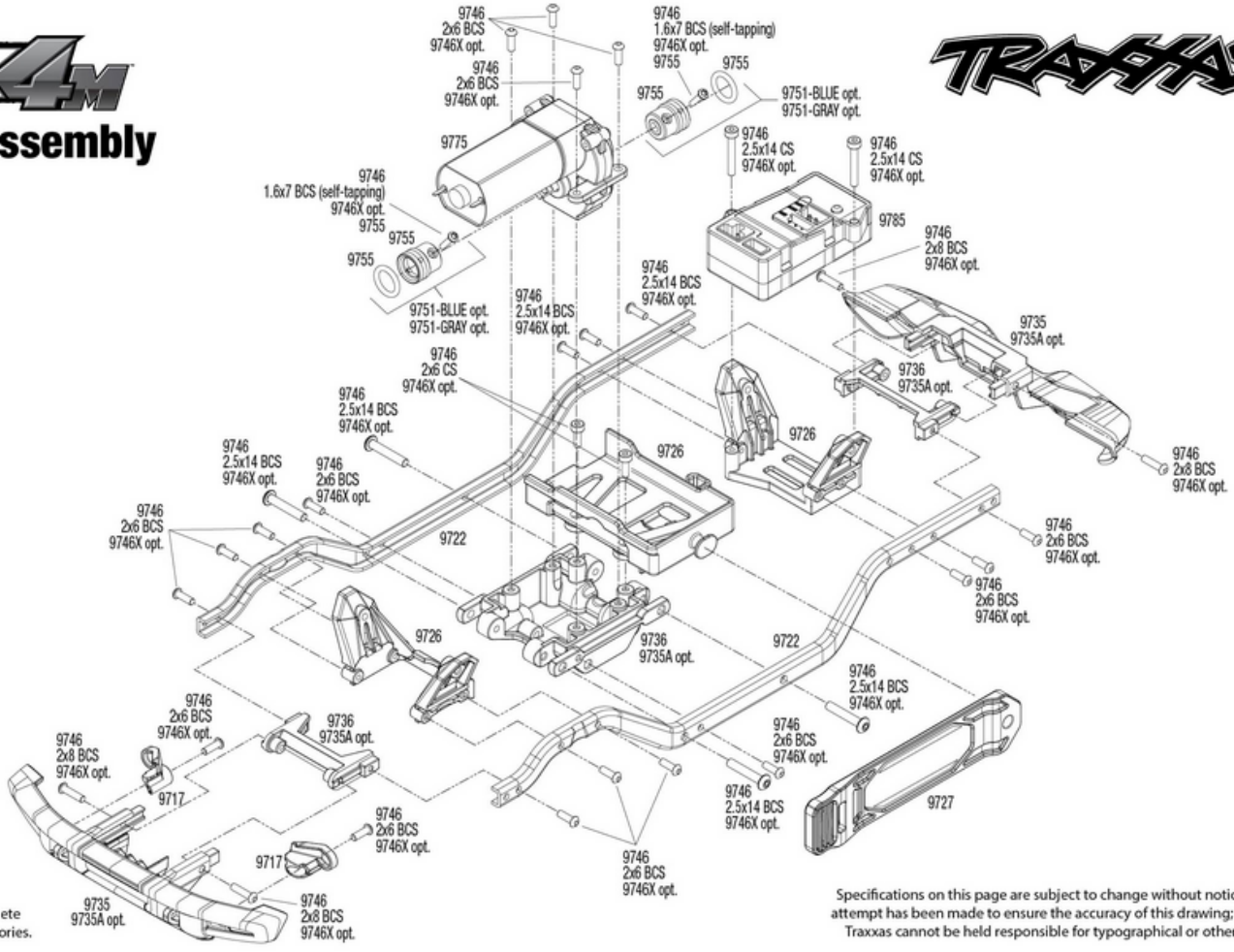

REV 220919-R03

See Parts List for a complete listing of optional accessories.

Specifications on this page are subject to change without notice. Every attempt has been made to ensure the accuracy of this drawing; however, Traxxas cannot be held responsible for typographical or other errors.

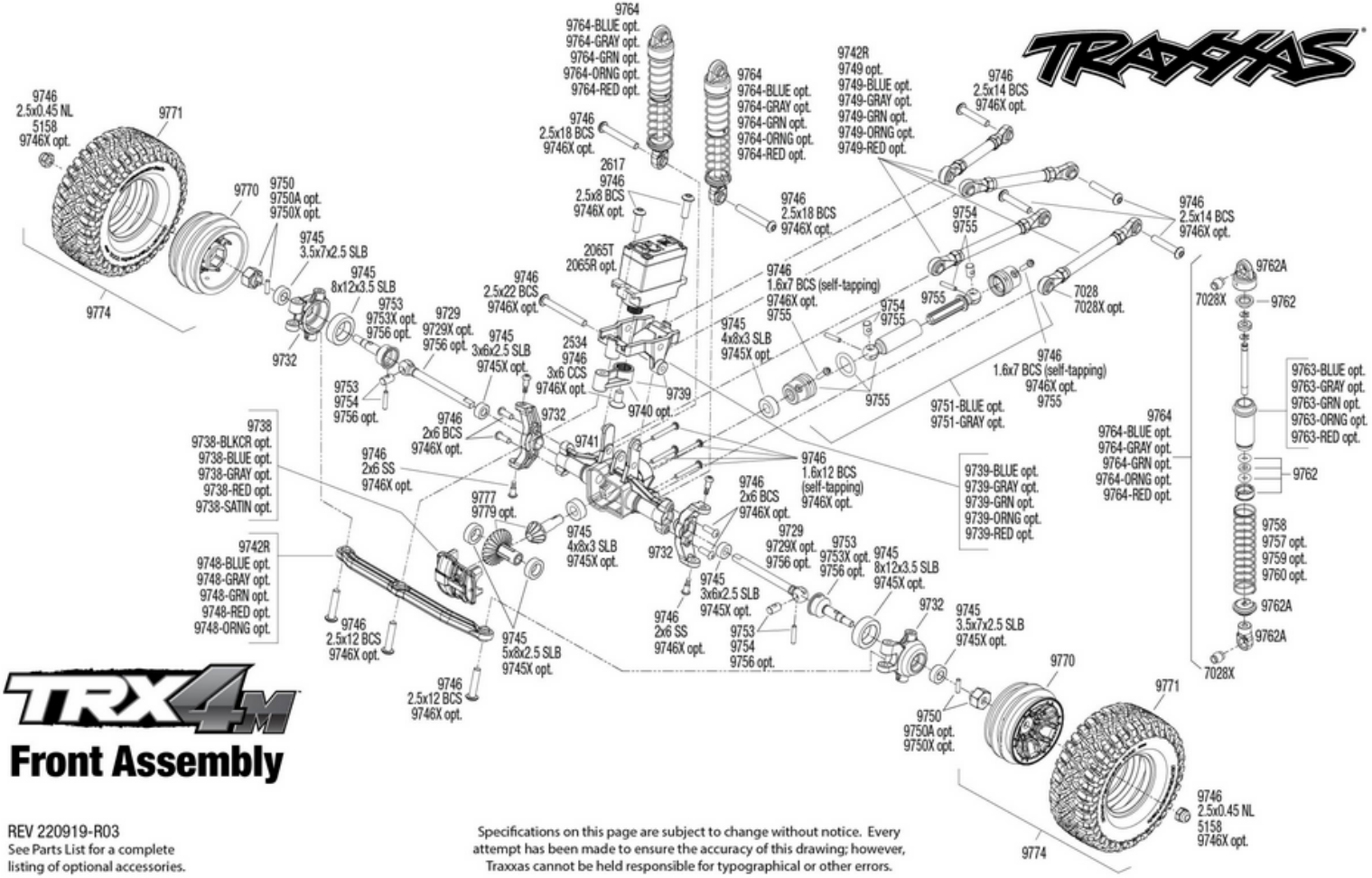

TRX4M Front Assembly

REV 220919-R03

See Parts List for a complete listing of optional accessories.

Specifications on this page are subject to change without notice. Every attempt has been made to ensure the accuracy of this drawing; however, Traxxas cannot be held responsible for typographical or other errors.

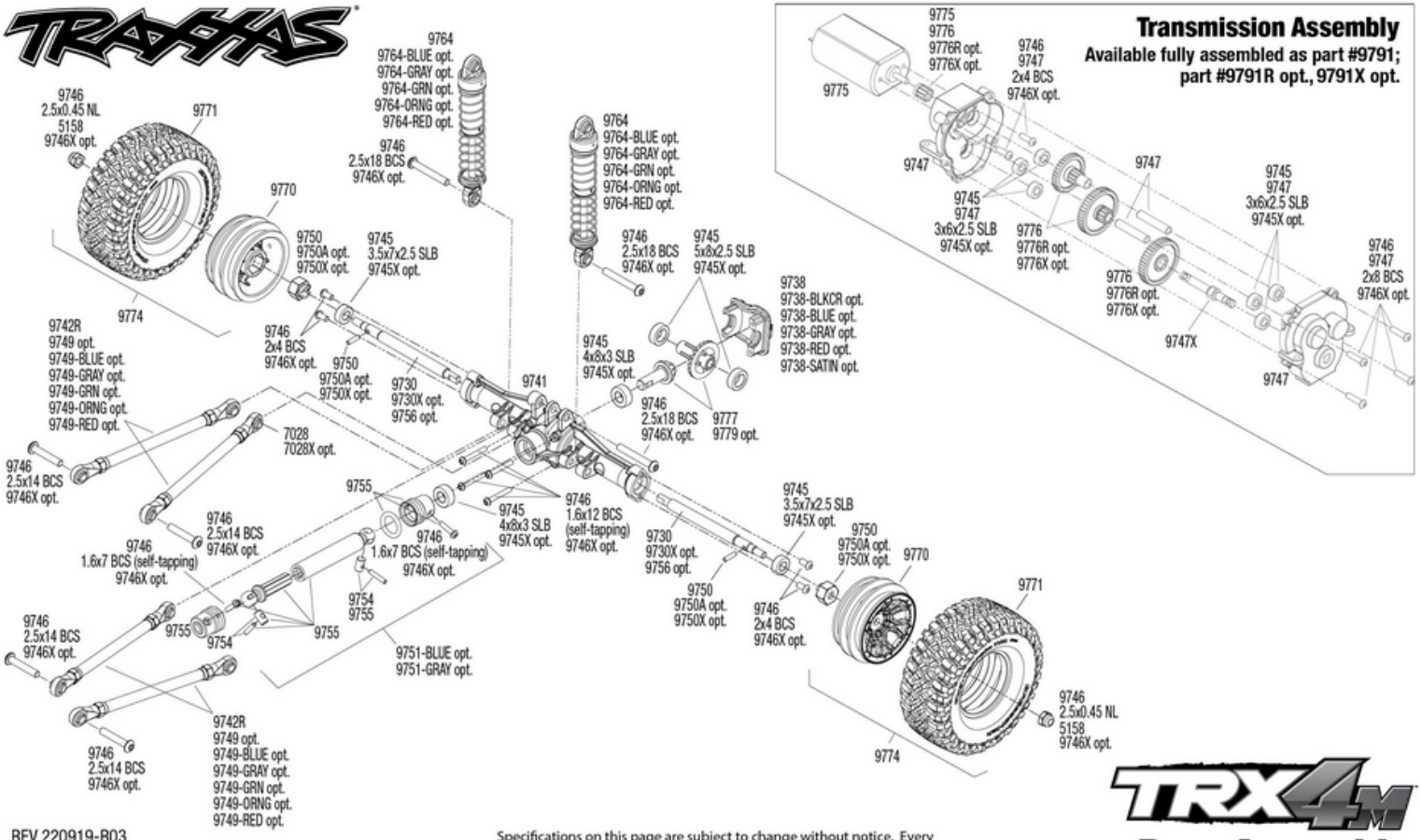

REV 220919-R03

See Parts List for a complete listing of optional accessories.

Specifications on this page are subject to change without notice. Every attempt has been made to ensure the accuracy of this drawing; however, Traxxas cannot be held responsible for typographical or other errors.