SWPPP Binder Insert
ERTEC Drop Guard™
Field Drain Inlet Protection

Definition – ERTEC Drop Guard™
A temporary sediment control device made of high density polyethylene (HDPE) with an integrated filter. During construction, install device around the manhole or grate of the field drain inlet near where soil is disturbed.

Purpose
Storm drain inlet protection is used to intercept sediment laden water at the field drain inlet opening to prevent sediment and associated pollutants and debris from entering the storm water underground pipe systems. The system filters larger particles and reduces water velocity which causes heavier soil particles to be deposited above ground. While allowing flow, the barrier filters certain smaller sized particles from suspension and prevents them from flowing through the device and into the underground pipes. Advantages are that it is effective, durable, re-usable, easily installed and cleaned.

Conditions Where the Practice Applies
It is recommended for use around field drain inlet manhole openings or grates prior to paving. Generally, the drainage areas should be less than 1/2 acre. The area around the drain inlet should be stabilized with erosion control blankets or a hydraulically applied erosion control.

Design Criteria
- Geo-textile Filter: Apparent Opening Size (AOS) = 425 micron integrated particle filter. Clean water flow rate (ASTM D-4491) = 145 gpm/ft^2.
- Outer Jacket Material: HDPE. For detailed characteristics contact ERTEC. Assembly weight = 5 to 20 lbs. Module height = 15” or 12” (11” or 8” freeboard height after installation).
- Install 7’ panels around the manhole or grate as shown below using wood stakes (1”x2”x18”) at the section overlaps to attach overlapping segments (with 1” wood screws). Trench 4” deep around drain inlet apron or grate and backfill with soil. For detailed installation instructions read installation guidelines available at www.ertecsystems.com.

Maintenance
Perform maintenance as required. Inspect following rainfall events and at least daily during prolonged rainfall. Maintain Drop Guard™ to provide adequate sediment holding capacity. Debris shall be removed daily and sediment shall be removed when the sediment accumulation reaches 8 inches. Removed sediment shall be incorporated in the project at designated locations or disposed-of outside the project or in conformance with requirements. Remove the device after final stabilization has been achieved. The device is reusable.

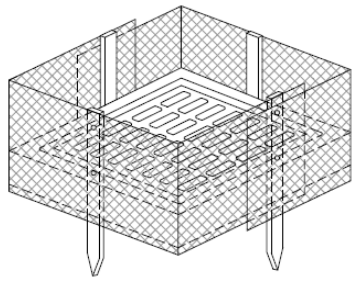

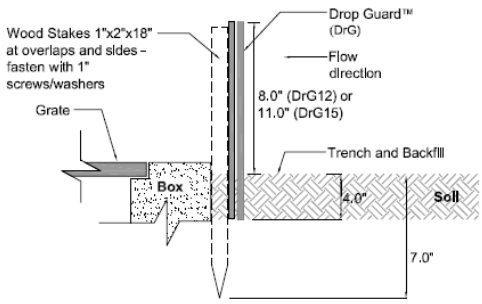

Drop Guard™

© 2006-2015 ERTEC Environmental Systems

www.ertecsystems.com

866-521-0724