Hobie® Mirage®
Kayak Manual

In 1950, Hobie's dream was born in his parents' garage when he decided to apply his love of woodworking to the sport of surfing. Dad backed out the Buick... Hobie carved out his very first surfboard...

Hobie's business of fun had begun.

Table of Contents

Anatomy 5
Assembly 6
MirageDrive® 8
Vantage CT 10
On the Water 17
Lowrance® Ready Option 20
Storage and Transport 23
Maintenance and Care 26
Safety 28
Warranty 30

Look for this icon. Online video is available at

www.hobiecat.com/support/products

Please read through the instruction manual before using this product

1. Hull
2. MirageDrive
3. Vantage CT Seat
4. Paddle
5. Cassette Plug
6. Gear Bucket

1

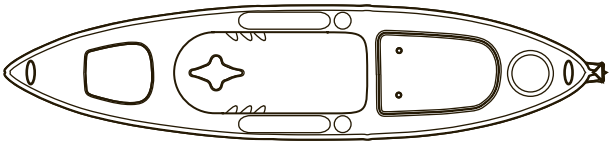

2

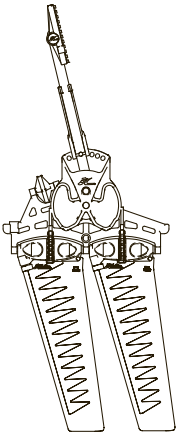

3

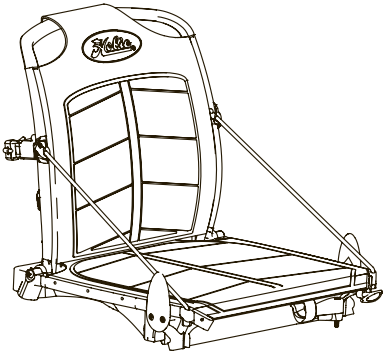

4

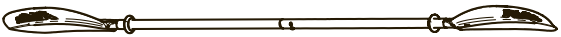

5

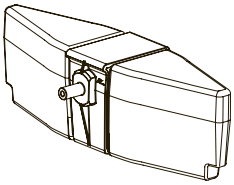

6

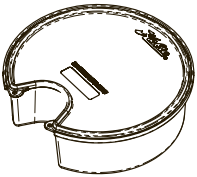

Items not shown to scale

hobiecat.com

MirageDrive Cranks

Depending on the Mirage kayak model, cranks may or may not require assembly.

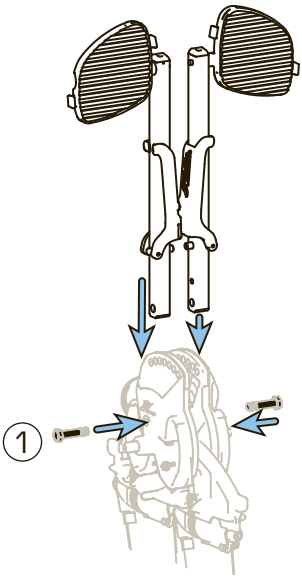

1

Insert cranks into drums.

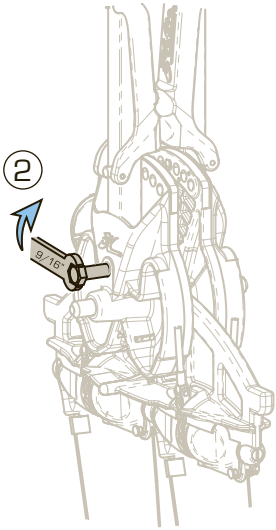

2

Tighten crank bolt using a 9/16" or 15mm wrench until the bolt is flush with the drum.

Vantage CT Assembly

1

Line up threaded inserts on seat back frame with holes molded in seat bottom frame.

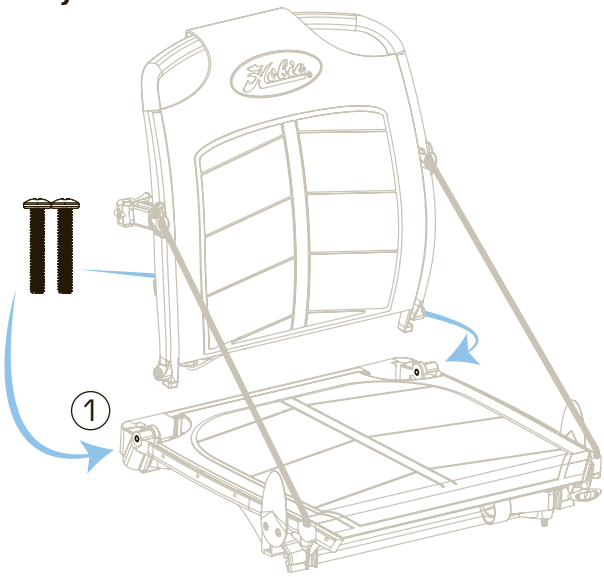

2

Once aligned, insert screws and tighten.

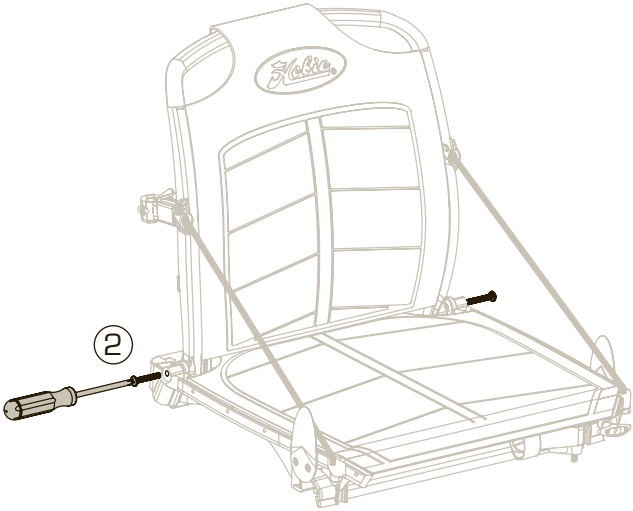

Installation

1

Lower drive straight down making sure the spine is level

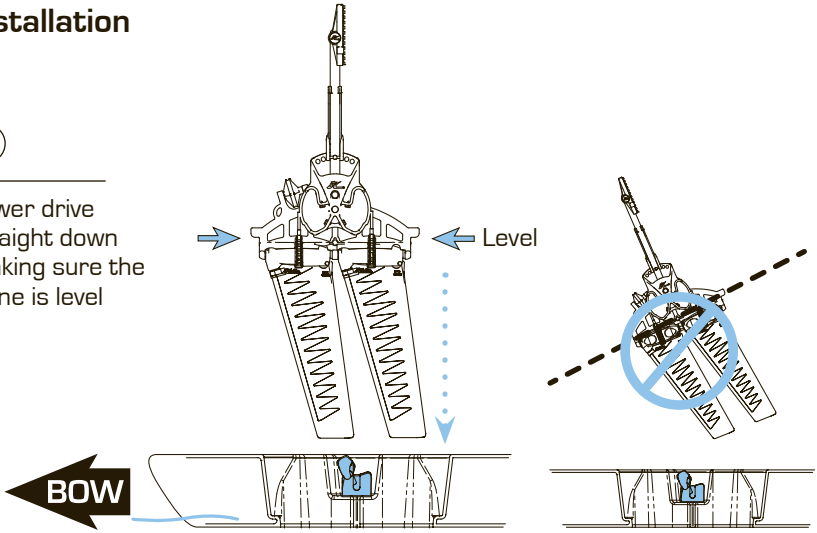

2

Press down and lock drive into Click and Go's. The drive locks automacally when installed.

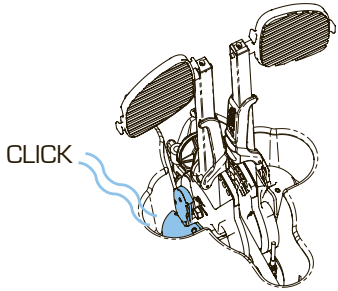

Removal

1

Pull back each Click and Go lever

2

Lift drive straight up

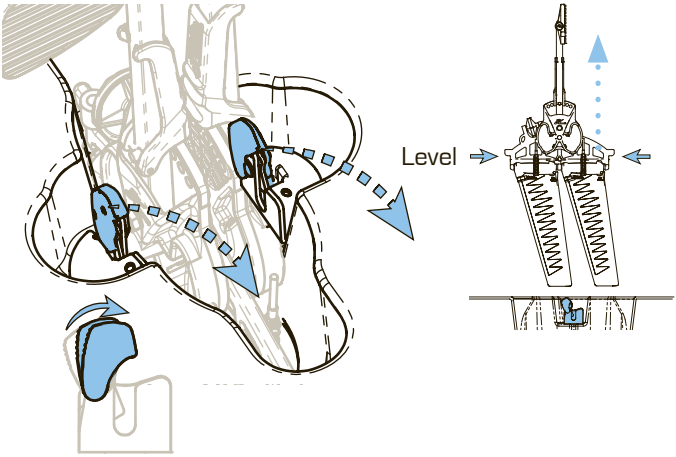

Pedal Adjustment

1

Squeeze adjuster handle

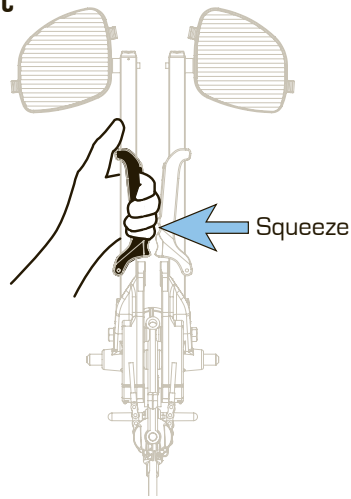

2

Adjust cranks to desired position by rotating and clicking them into the desired position. Make sure both cranks are in the same position number.

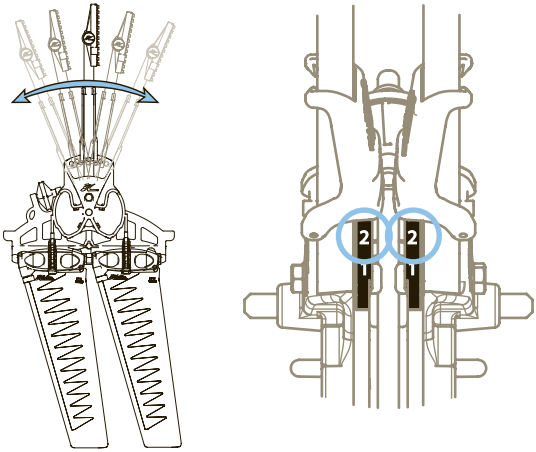

3

With both feet on the pedals and together (fins straight down), your knees should be comfortably bent and not over crunched or extended.

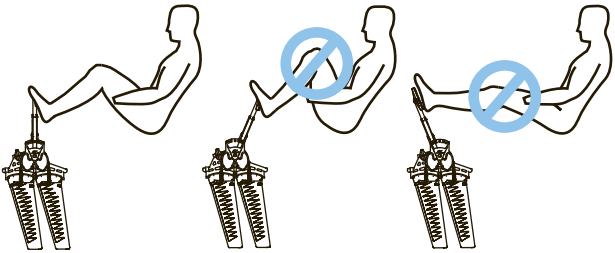

Anatomy

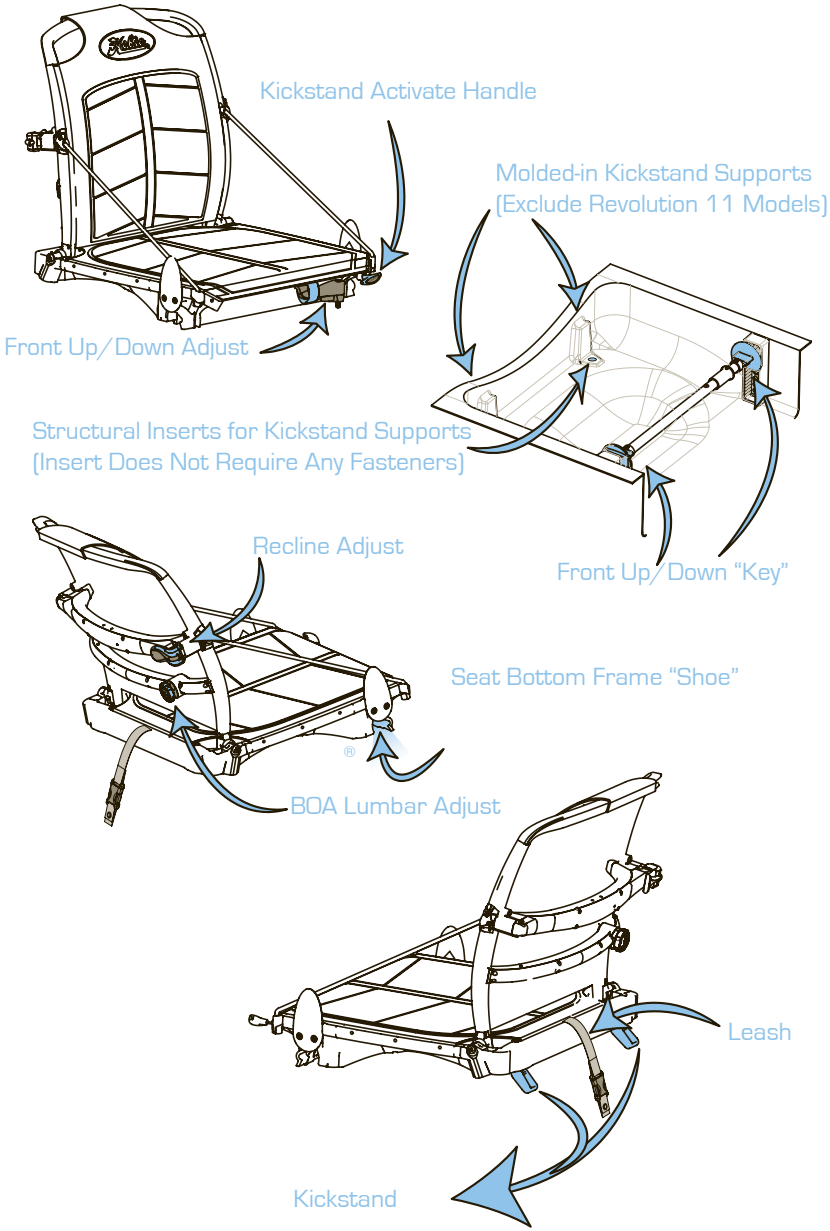

Items not shown to scale

Seat Installation

1

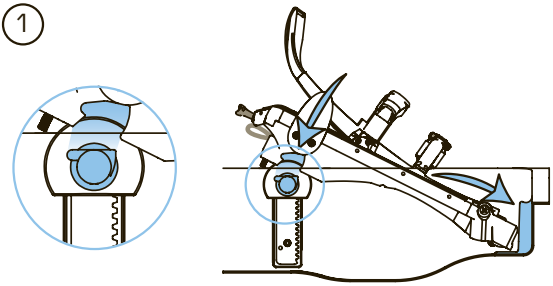

1

Line up the front of the seat bottom frame over key and slide the back of the frame to the back wall in the cockpit.

2

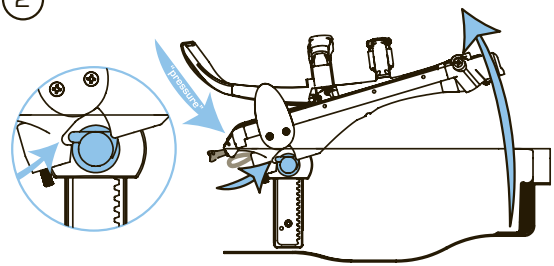

2

Put pressure on the front of the seat mesh & lift the back of the seat bottom frame to set the seat into the key.

3

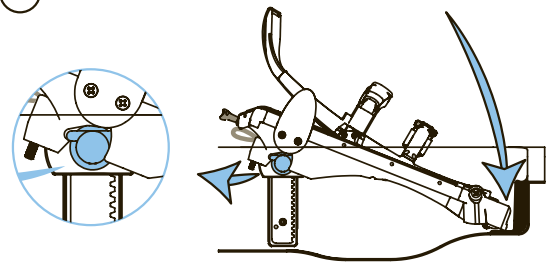

3

Push the seat-back frame down once the seat frame is fit into the key. Pull up on front of seat to check for proper installation.

4

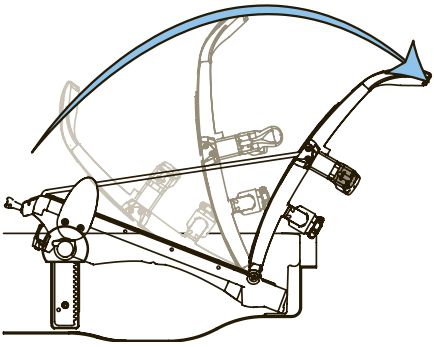

4

Flip seat back up.

Seat Installation

5

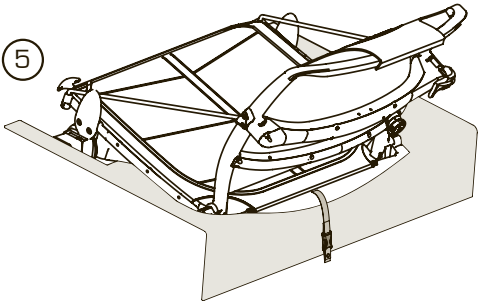

5

Locate leash buckle on the seat bottom frame and firewall behind the seat.

6

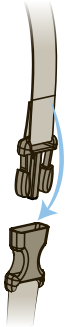

6

Line up and plug in the two parts of the buckle.

7

7

When the two parts are clicked into place, the seat is secured to the kayak.

8

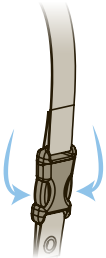

8

Pinch to unlock.

Warning: Failure to secure the seat with the leash buckle could result in loss of seat during a capsize event.

Front Up/Down Adjustment

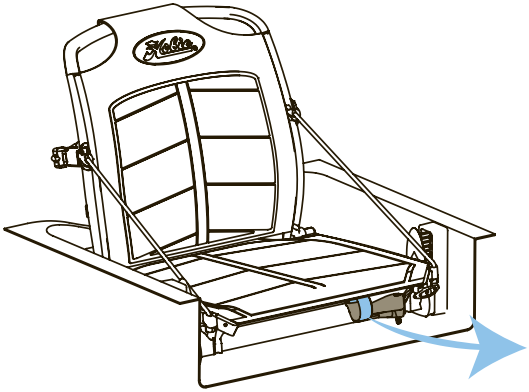

Pull lever out to activate front up/down adjustment.

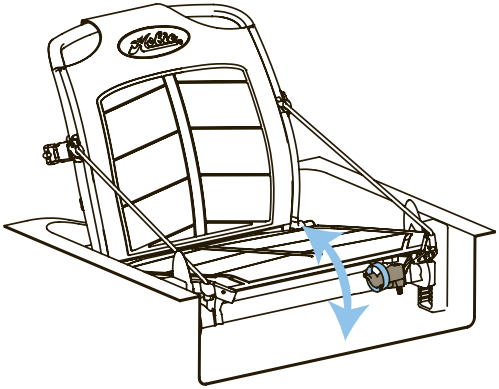

Lean back into seatback to raise the front up/down adjustment. Use body weight in seat bottom to drop into a lower positon.

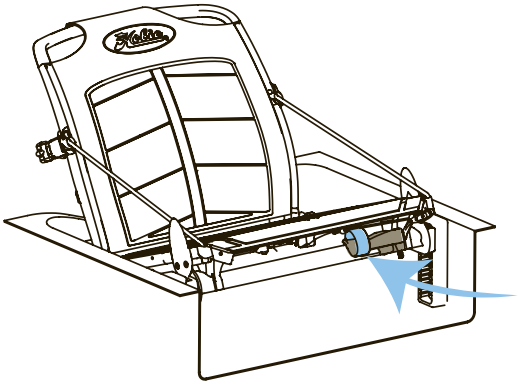

Release lever to lock the desired position of the front up/down adjustment.

Rear Up/Down Adjustment

LOW

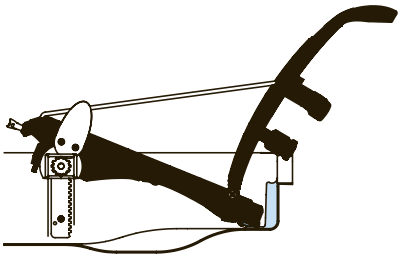

The seat is set to a default low position.

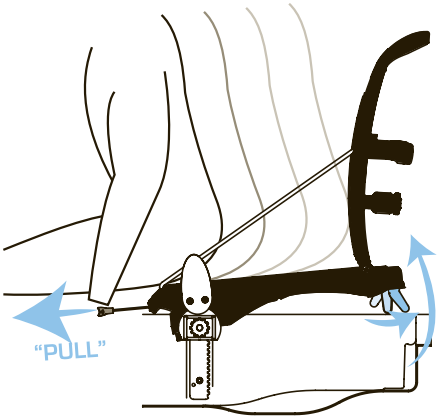

Move weight toward the front of the seat bottom mesh to raise the back of the seat. Pull "T" handle to activate kickstand.

MID

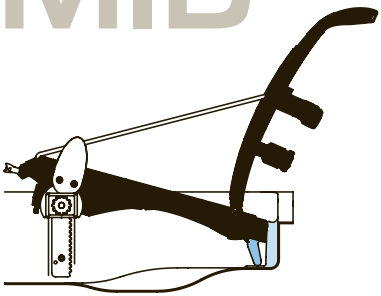

Set kickstand on the boat hull for mid-level seating.

HIGH

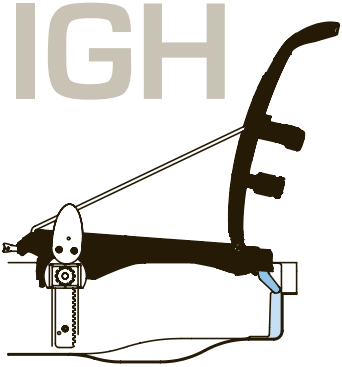

Set kickstand on the shelf for high-level seating.

(There is no shelf for the high seating position on Revolution 11 models.)

Recline Adjustment

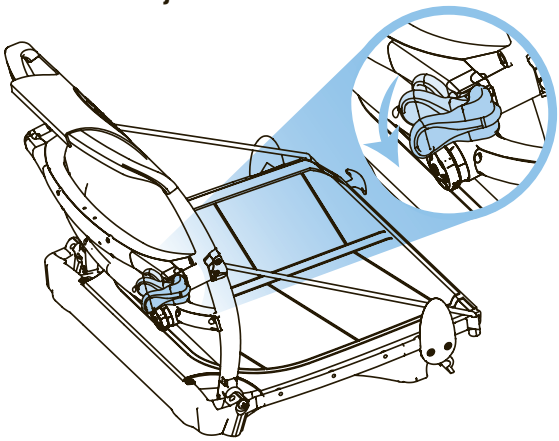

Pull lever out to activate the seat-back to recline.

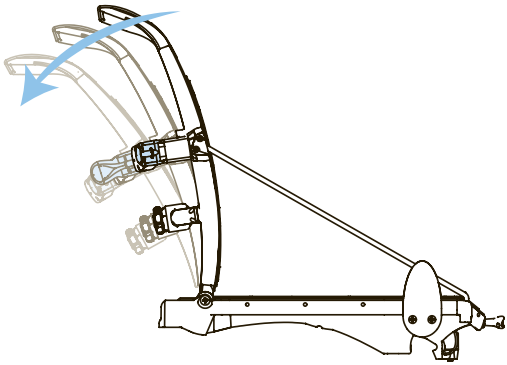

While holding the lever out, push back into the seat to recline.

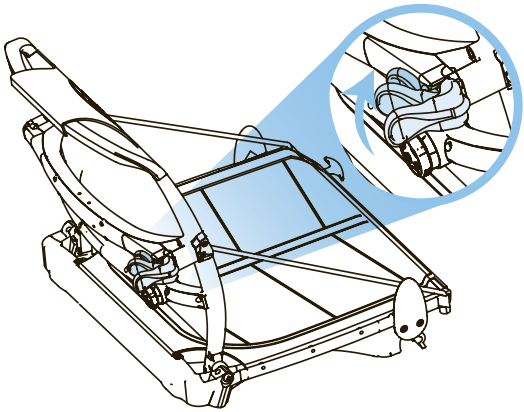

Release lever to lock seat into position.

Lumbar Adjustment

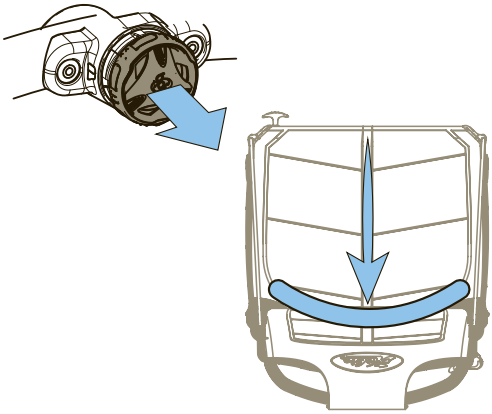

Pull knob to release lumbar.

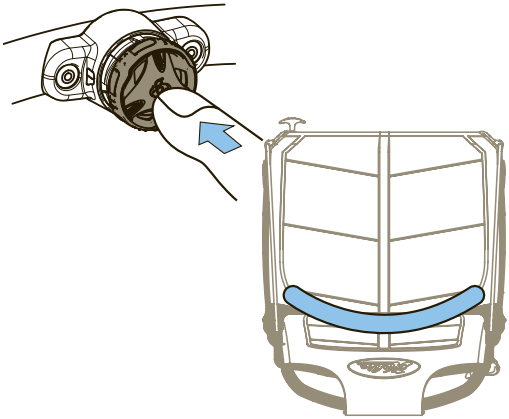

Press knob to lock lumbar.

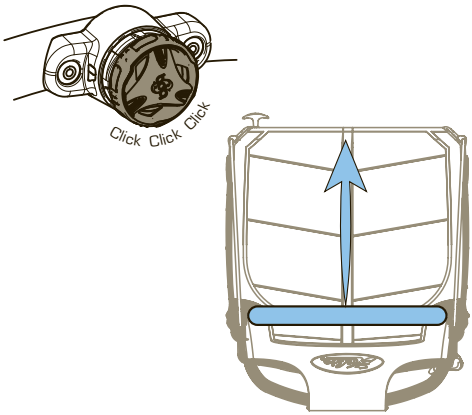

Rotate knob to tension lumbar.

MirageDrive Operation

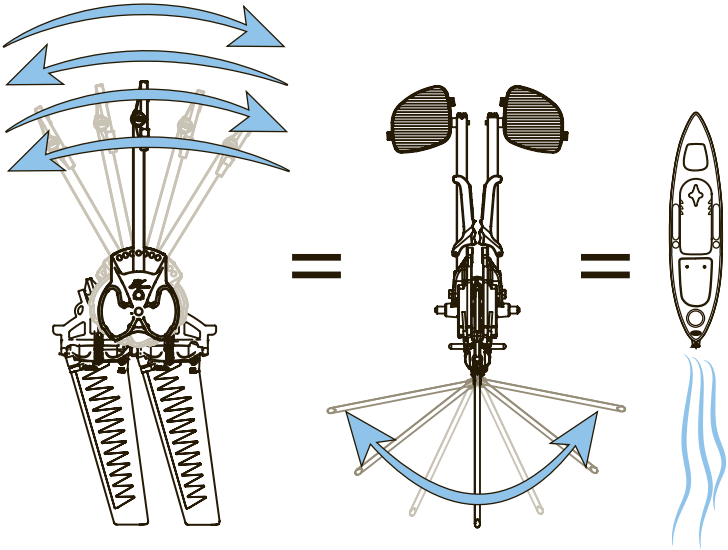

Shallow Water + Beaching

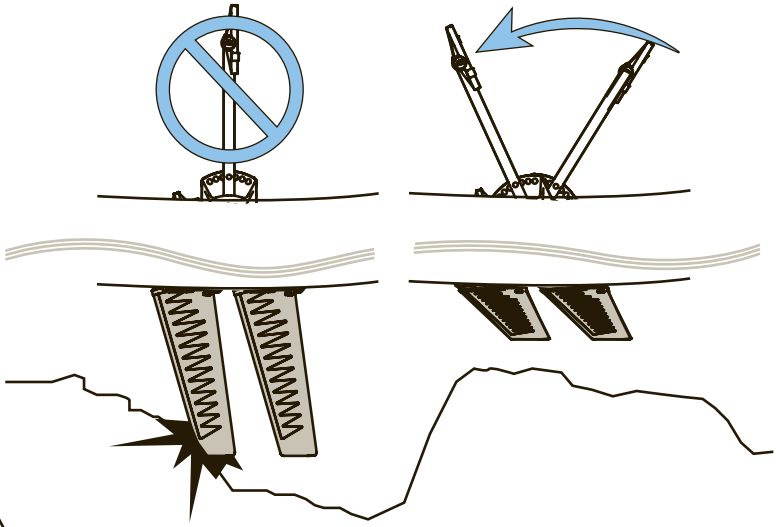

Press either pedal forward in shallow water to raise fins. Pressing one pedal fully forward will orient the fins with the kayak underside to allow beaching.

Rudder DOWN

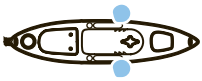

Pull on “down” “T” Handle fully and cleat to engage rudder.

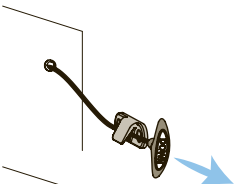

Rudder UP

Uncleat “down” “T” Handle line before retracting rudder.

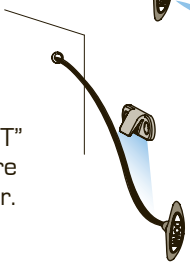

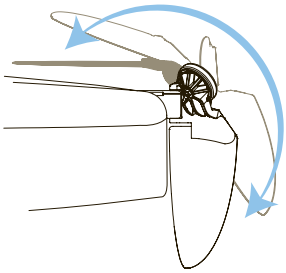

Pull on “up” “T” Handle to retract rudder.

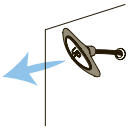

Steering

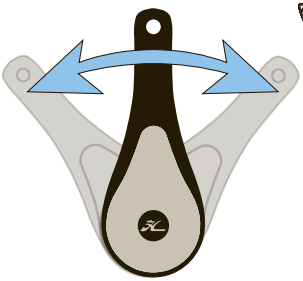

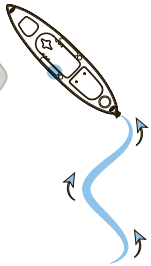

Paddle Storage

Rest paddle on side rails for storage. Secure by hooking the shock cord around eyelet post.

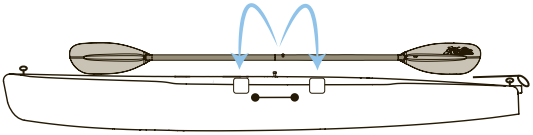

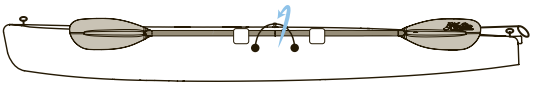

Seat Drainer

Seat Drainer not included on Outback models

Pull "T" Handle to open drain.

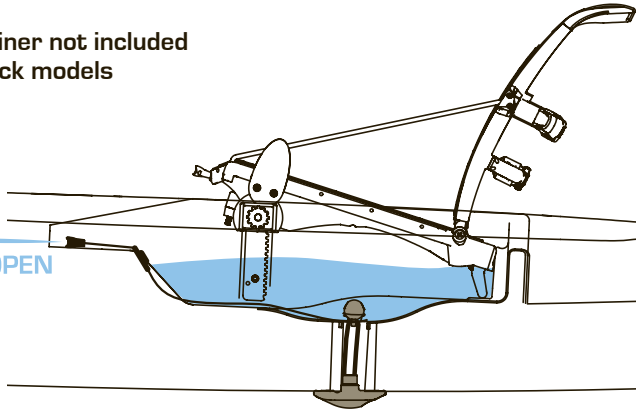

Cleat to keep drain open.

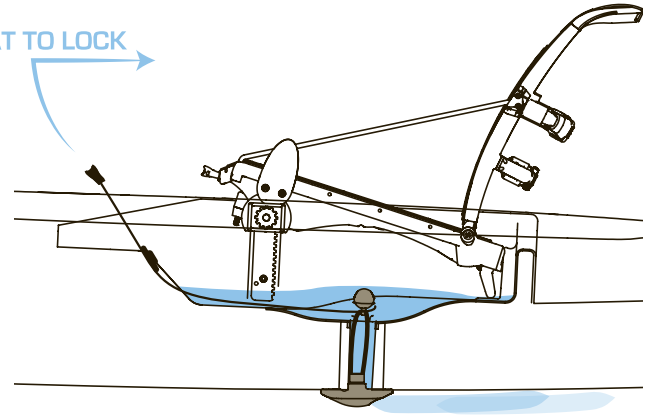

Note: Pedal at a brisk pace to evacuate water from seat well.

Uncleat and release to close drain.

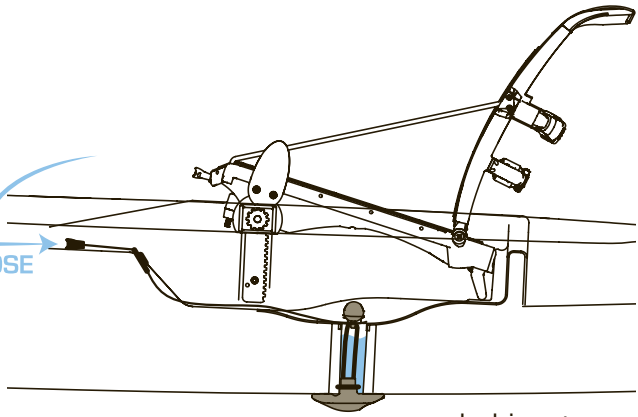

Transducer Installation

Not all boats are equipped with "Lowrance Ready."

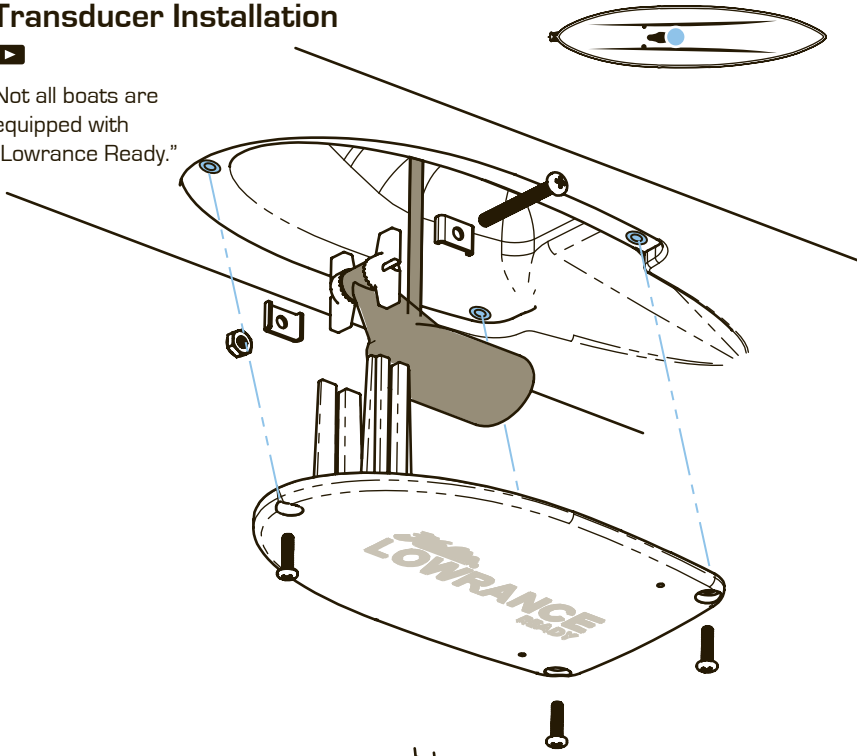

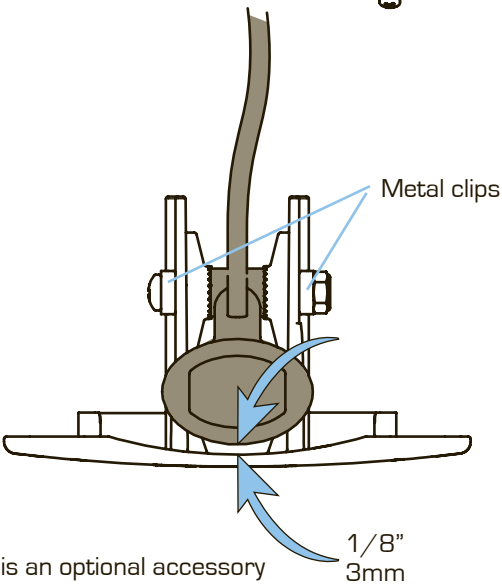

The transducer is an optional accessory and is not included with boat

Thru-Hull Plugs

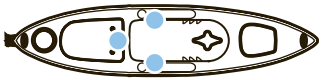

1

Locate the thru-hull plug and unscrew the nut on the inside of the boat.

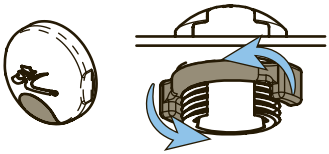

2

Remove the solid rubber plug.

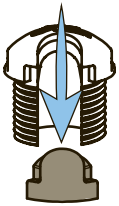

3

Choose the correct plug for your wire size and insert the wire by opening the plug along the slit.

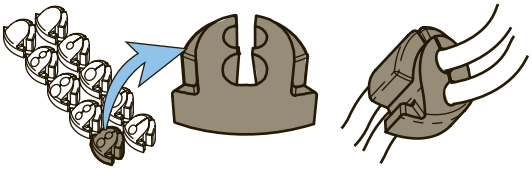

4

Press the new plug with the wire installed into the plastic plug making sure it fits tightly.

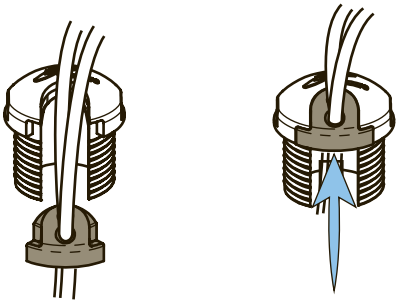

5

Bolt the thru-hull wire assembly to the hull using the nut, making sure you have the o-ring installed.

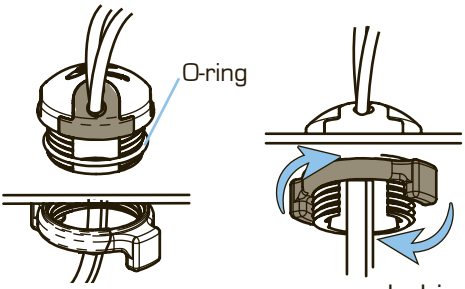

Wire Installation

1

Run the cable into the plug just behind the transducer scupper.

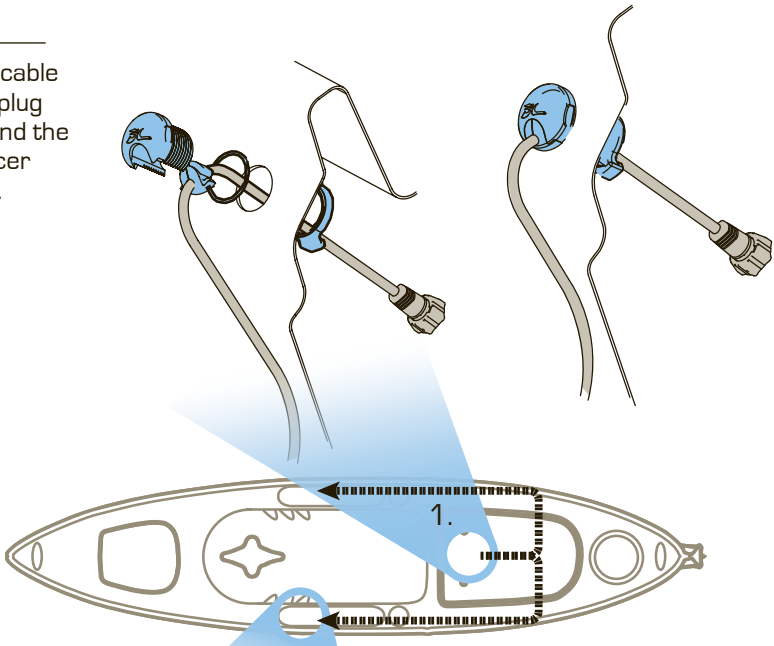

2

Lead the cable through the insde of the boat and exit the cable out through the thru-hull fitting.

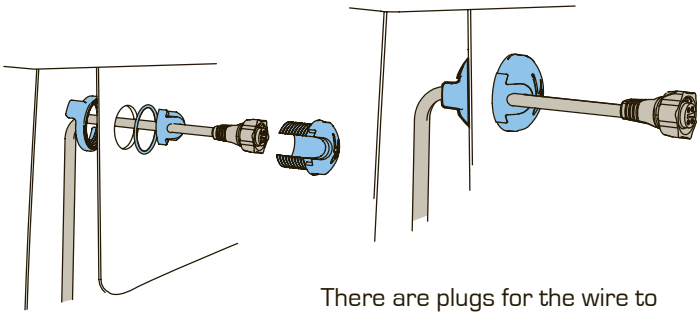

There are plugs for the wire to come out on either side of the boat if you prefer a right/left side screen location.
NOTE: Some plugs are located in cup holders and mesh pockets.

Storage Do's

Storing your boat upside down on crossbars or hanging from wide strapping are two other ways to keep the boat stored.

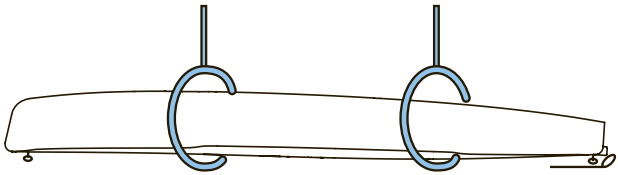

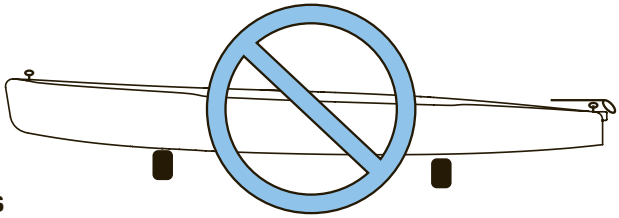

Storage Don'ts

Storing your boat cockpit side up on crossbars can dent the bottom.

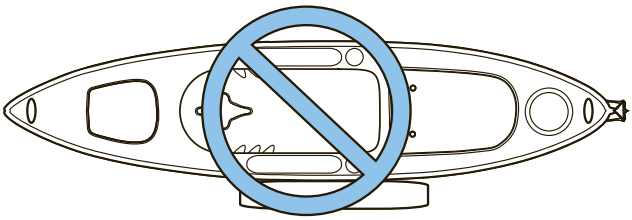

Storing your boat on its side over a long period of time can flatten/dent the sides.

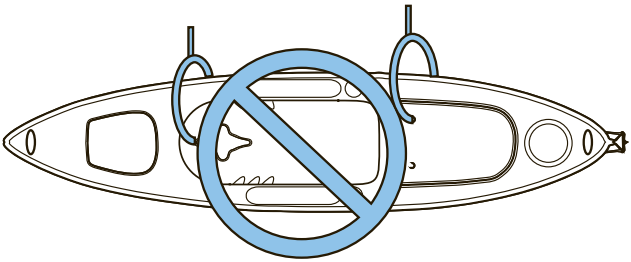

Hanging the boat by the scuppers can distort the scupper holes.

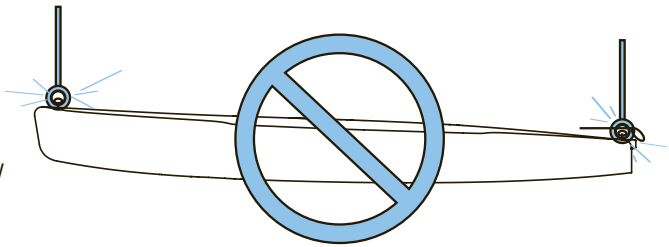

Never hang the boat by handles or pad eyes. They are not designed to handle long-term load and will fail.

Additional Storage Key Points

- Always remove all water from boat
- Don't leave tie-down straps tight over a long period of time
- Storing in non-recommended configurations can result in hull damage and can void your warranty

Cart

The cart should be used for transportation purposes only and not as a storage platform. Do not leave your boat on the cart for more than one hour (less time in warmer temperatures or direct sunlight).

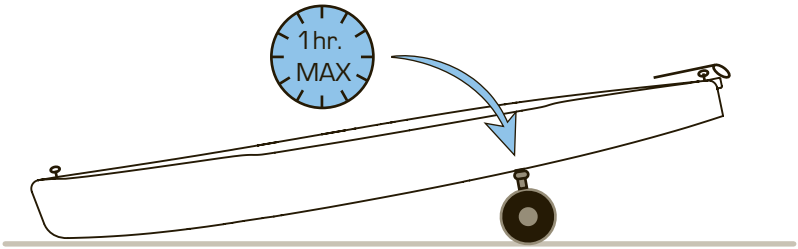

Store out of Weather

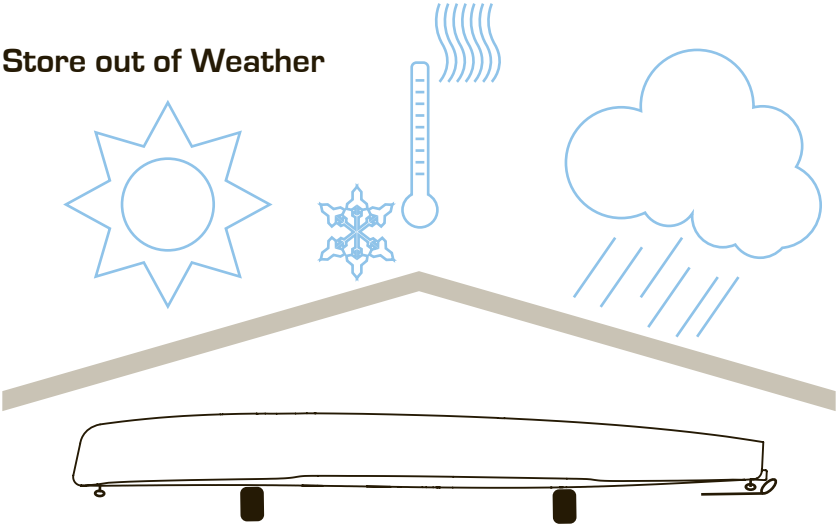

Roof Topping

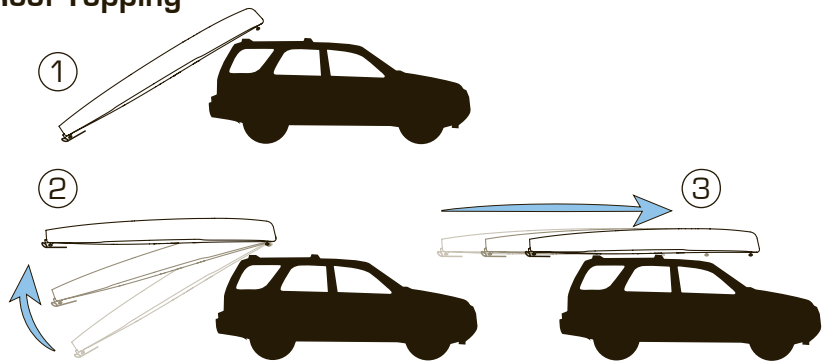

The best way to transport your boat is to purchase a trailer or roof rack from your dealer. Using proper cradles that support the hull, the boat can be transported right side up. Straps can then be laid across the boat and tied to the rack bars. Straps should be tight, but not so tight that they distort the shape of the boat. Avoid using ratchet straps to prevent overtightening.

Be sure to consult your car and roof rack owner's manual to ensure that you comply with all recommendations, precautions and specifications.

Running a line or strap from the bow and stern of the boat to each bumper is required. If your bumpers do not have a gap to pass a rope around, look underneath. There should be a loop of metal, which is used by car transports such as tow trucks.

Many people like to use the scupper holes to tie the boat to the car. This helps prevent the boat from sliding back and forth or the tie-down rope from slipping off the boat. (This is an acceptable method for tying the boat down for transport.)

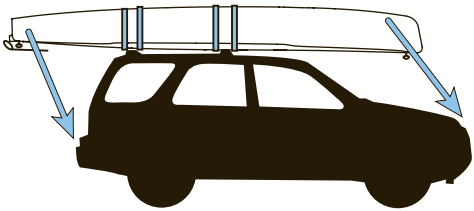

MirageDrive Regular Maintenance

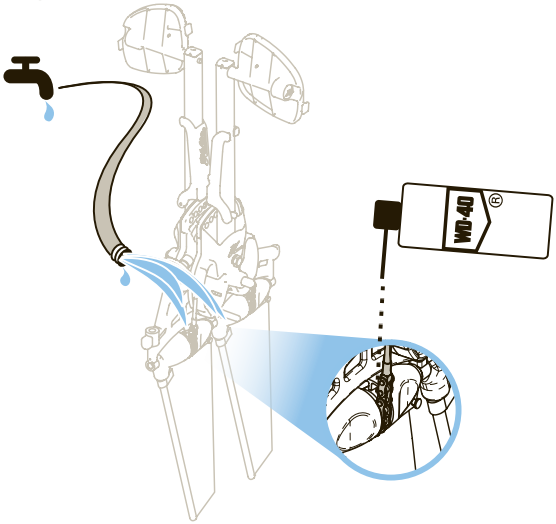

Checking Cable Tension

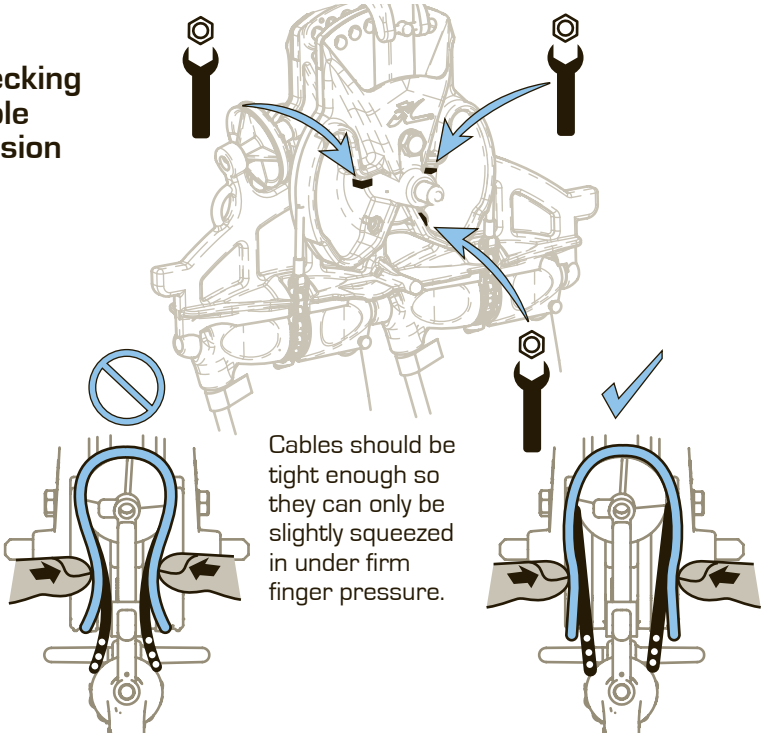

Cables should be tight enough so they can only be slightly squeezed in under firm finger pressure.

Visit the “support” section at hobiecat.com for information on the MirageDrive.

hobiecat.com

Rudder Tuning

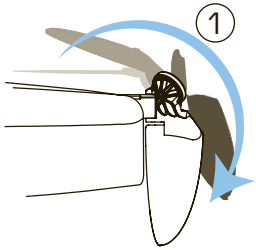

1

Pull down rudder.

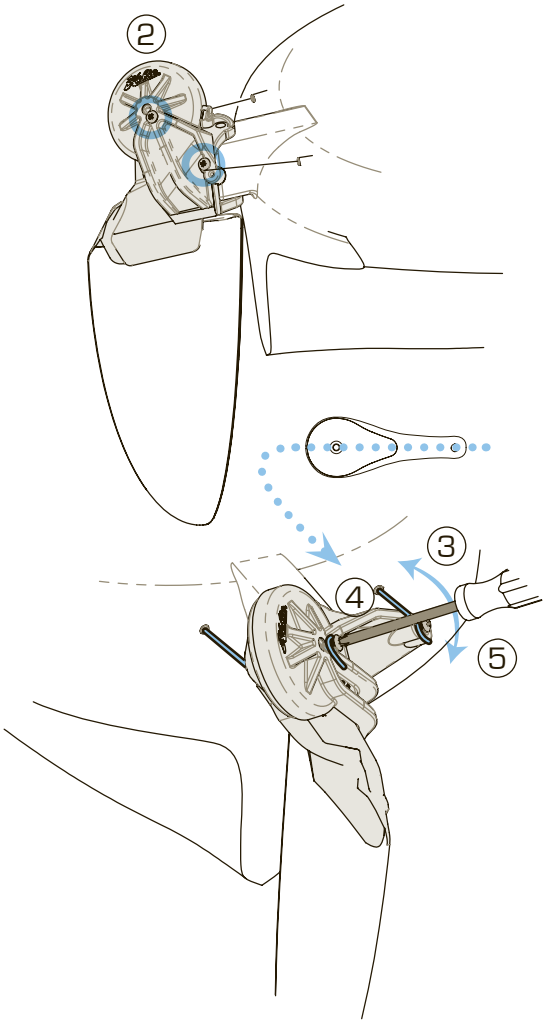

2

Locate screws that clamp the rudder line.

3

Loosen the screw clamping the rudder line.

4

Pull the slack out of the rudder line making sure the steering handle is still straight. If it is not straight, adjust the lines accordingly.

5

Tighten the screw to clamp the line and hold it in place.

Checklist

Please read through the owner's information package prior to using this product.

The user of this product acknowledges both an understanding and assumption of risk involved in paddle/pedal sports. Consult your physician prior to beginning.

Always:

- Wear a Coast Guard approved personal flotation device (lifejacket).
- Dress appropriately for weather conditions; cold water and/or weather can result in hypothermia; apply sunscreen and other sun protective clothing.
- Check your equipment prior to each use for signs of wear or failure.
- Tie a safety leash to your paddle and MirageDrive.
- Scout unfamiliar waters.
- Be aware of river water levels, tidal changes, wind conditions, obstacles in and above the water and weather changes.
- Always make sure that your hatches are secure ad closed.
- Carry a pump and/or bailing device.
- Always carry the spare paddle provided with the boat.

Never:

- Never go alone and always file a float plan.
- Never go in flood and/or fast moving water conditions. Hobie kayaks are not designed for fast moving water.
- Never exceed your ability and be aware of your limitations.
- Never use alcohol or mind-altering drugs prior to or while using this product.
- Never open your hatches in unstable water conditions.
- Never remove the foam pieces inside the hull. They are installed for structure, additional flotation and safety.

Shakedown Cruise

As with any new product, it is important that you become familiar with the boat and all its features. It is also important to determine that the boat is sound before long trips. We recommend that you do what we call a "shake-down cruise" when the boat is new, after shipping or transport, before long trips and after installing any thru-hull fittings. This test is typically done in shallow, calm conditions where you can familiarize yourself with or test the boat before taking any long trips into open water. Things you should check or practice are:

- MirageDrive installation, adjustment and removal
- Rudder operation
- Closing hatches properly
- Drain plug locations to make sure they are properly installed
- Getting in and out of the boat from a capsized state
- Taking the kayak sail down on the water (if applicable)

Getting into your Boat

If you fall out of your boat, stay with the boat. You should be properly wearing a life jacket/PFD which will keep you afloat. If the boat is upside-down, it will need to be turned over. To do this, reach across the bottom of the boat and grab the scupper hole or the Hobie MirageDrive and pull the boat upright. Position yourself so your head is near the cockpit area of the boat and you are facing the boat. You will want to be between the seat and the footwell areas of the boat. Reach across the boat to the far edge with one hand. Place the other hand on the near-side rail, then kick with your feet, pulling yourself up and onto the boat. Roll over onto your backside toward the seat, which should place your backside in the seat. Sit up, swing your feet into the footwells and you're ready to go.

Mirage Kayak Cassette Plug

You Hobie is shipped with a Mirage Cassette Plug. The plug is provided as standard equipment in the Mirage Kayak package. Insert the plug into the Mirage well when the MirageDrive is removed to provide added safety and to "fair" the bottom of the hull when paddling.

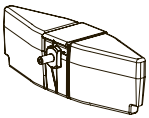

Kayak Sail Safety

The kayak sail is a very popular optional accessory that works really well with Hobie Mirage kayaks. It is important to familiarize yourself with the use of the sail and how wind power affects the stability of the boat. The sail is not recommended to be used in wind conditions over 10 MPH.

It is very important that you complete and send us your Warranty Registration Card as soon as possible.

This information enables Hobie Cat Company to contact you should there be important product information that needs to be shared with you in a timely manner. Please complete the Warranty Registration Card in your Owner's Packet, or take advantage of our online option at:

http://www.hobiecat.com/support/warranty-registration/

or

Scan this QR code with your smart phone

If you have a question or issue with your Hobie product, please see your Authorized Hobie Kayak Dealer. They will assess the problem, assist with a repair and file a warranty claim with Hobie Cat Company if needed. All warranty claims must go through your Authorized Hobie Kayak Dealer. The Warranty Registration Card and Warranty Policies are included with each model in the Owner's Packet. Type in the address below to go to our dealer finder webpage.

All specs, colors, graphics and features are subject to change without notice. Please refer to the webside for complete details.

http://www.hobiecat.com/support/dealers/search/

Enjoy the Ride!

Hobie Cat Company
Holding Company
Oceanside, California, USA
1-800-HOBIE-49
hobiecat.com

Hobie Cat Australasia
Subsidiary
Huskisson, New South Wales, Australia
1-800-4-HOBIE
hobiecat.com.au

Hobie Cat Europe
Subsidiary
Toulon, France
+33(0)494 08 78 78
hobie-cat.net

Hobie Kayak Europe
Independent Distributor
Stellendam, The Netherlands
+31(0)187 499 440
hobie-kayak.com

Hobie Cat Brazil
Independent Distributor
Bahia, Brazil
+55 (73) 9982 2424
hobiecat.com.br

PN 89500
REV 150827